Name _____ Date _____ Class _____

LESSON 8-4

Practice B

Angles of Elevation and Depression

Marco breeds and trains homing pigeons on the roof of his building. Classify each angle as an angle of elevation or an angle of depression.

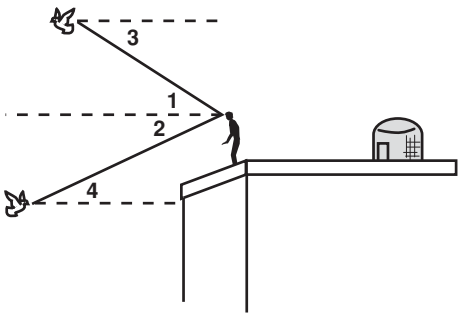

1. ∠1 _____

2. ∠2 _____

3. ∠3 _____

4. ∠4 _____

To attract customers to his car dealership, Frank tethers a large red balloon to the ground. In Exercises 5–7, give answers in feet and inches to the nearest inch. (*Note:* Assume the cord that attaches to the balloon makes a straight segment.)

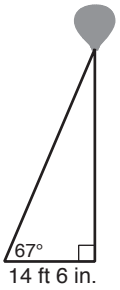

5. The sun is directly overhead. The shadow of the balloon falls 14 feet 6 inches from the tether. Frank sights an angle of elevation of 67°. Find the height of the balloon. _____

6. Find the length of the cord that tethers the balloon. _____

7. The wind picks up and the angle of elevation changes to 59°. Find the height of the balloon. _____

Lindsey shouts down to Pete from her third-story window.

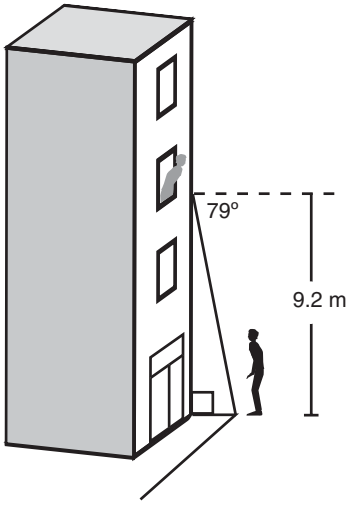

8. Lindsey is 9.2 meters up, and the angle of depression from Lindsey to Pete is 79°. Find the distance from Pete to the base of the building to the nearest tenth of a meter.

_____

9. To see Lindsey better, Pete walks out into the street so he is 4.3 meters from the base of the building. Find the angle of depression from Lindsey to Pete to the nearest degree.

_____

10. Mr. Shea lives in Lindsey's building. While Pete is still out in the street, Mr. Shea leans out his window to tell Lindsey and Pete to stop all the shouting. The angle of elevation from Pete to Mr. Shea is 72°. Tell whether Mr. Shea lives above or below Lindsey.

_____